C.I.P.

300 Win. Short Mag.

Country of Origin: US

TAB.	I
Date	02-01-22
Revision	08-09-23

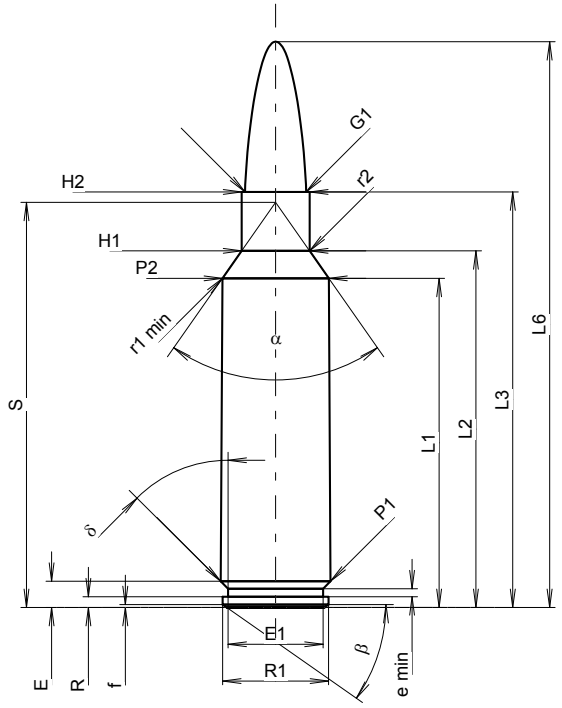

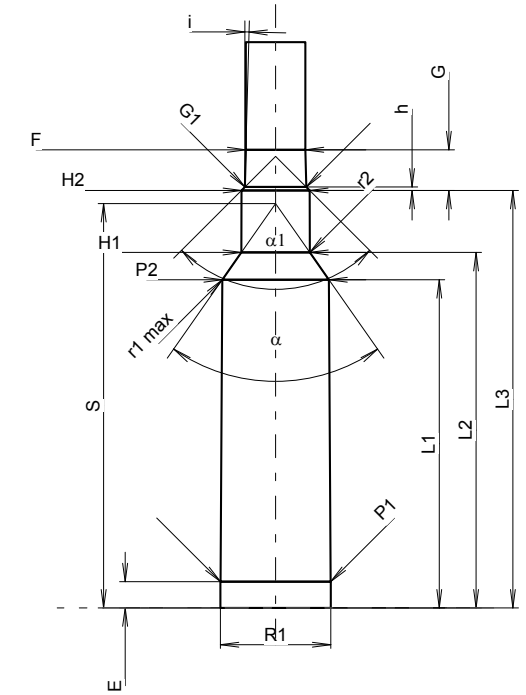

Scale 1.03:1

CARTRIDGE MAXI

Lengths

L1 1)	=	42.25	-0.20
L2 1)	=	45.77	-0.20
L3 1)	=	53.34	
L4	=		
L5	=		
L6	=	72.64	

Case Head

R	=	1.37
R1	=	13.59
R3	=	
E	=	3.35
E1	=	12.19
e min	=	1.02
δ	=	45°
f	=	0.36
β	=	35°

Powder Chamber

P1	=	14.12	
P2 1)*	=	13.67	-0.20

Junction Cone

α *	=	70°
S *	=	52.01
r1 min	=	1.27
r2	=	2.54

Collar

H1 *	=	8.74
H2 1)	=	8.74

Projectile

G1 1)	=	7.85
G2	=	
F	=	
L3+G 1)	=	58.56

Pressures (Energies)
Method Transducer

Pmax	=	4400	bar
PK	=	5060	bar
PE	=	5500	bar
M	=	25.00	
EE	=	5250	Joule

Miscellaneous Dimensions

Fe 1)3)	=	0.10
delta L	=	0.10

CHAMBER MINI

Lengths

L1	=	42.13
L2	=	45.63
L3 1)	=	53.59

Breech

R	=	
R1	=	14.19
R2	=	
R3	=	
r	=	

Powder Chamber

E	=	3.35
P1 1)	=	14.15
P2 *	=	13.70

Junction Cone

α 1)*	=	70°
S *	=	51.91
r1 max	=	1.27
r2	=	3.05

Collar

H1 *	=	8.79
H2 1)	=	8.76

Commencement of Rifling

G1 1)*	=	7.87
G 1)	=	5.22
α1 *	=	90°
h	=	0.45
s	=	
i 1)*	=	1°30'
w	=	

Barrel

F 1)*	=	7.62
Z 1)	=	7.82

Grooves

b	=	4.49	
N	=	4	
u	=	254.00	
Q	=	47.52	mm²

Dimensions in << mm >>
Dimensions and Tolerances for Proof Barrels
see Appendix CR 1.

Notes:
1) Check for safety reasons
3) Headspace on Shoulder
* Basic dimensions